ANT-F105-433 Folding 433MHz Antenna

412-440 MHz 1/4wave 2 dBi FOR SMA PLUG

Specifications/Special Features：

This antenna is designed for 412-440MHz wireless Communications

Specification	
Antenna Connector	SMA PLUG (Option)
Gain	2 dBi
Type	Monopole
Polarization	Linear Vertical
VSWR	≦2.0：1
Frequency	412～440MHz
Weight	13g
Size	L105×W10×H10 mm
Antenna Color	black

1/4wave 2 dBi FOR SMA PLUG

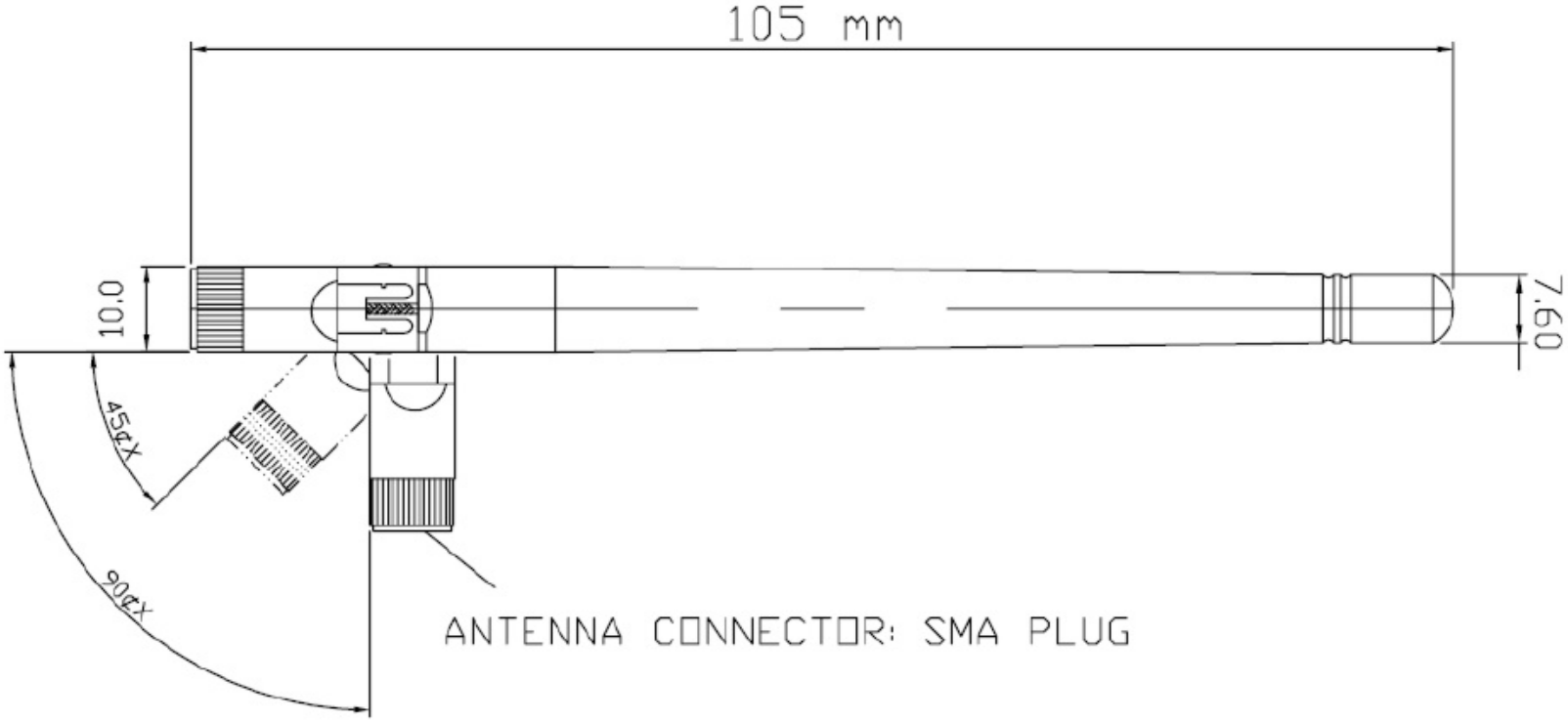

1		6	IMPEDANCE : 50 Ω
2	GAIN : 2dBi	7	
3	V.S.W.R : <= 2.0 : 1	8	
4	LENGTH : L105×W10×H10 mm	9	
5	CONNECTOR : SMA PLUG	10	

www.modtronix.com

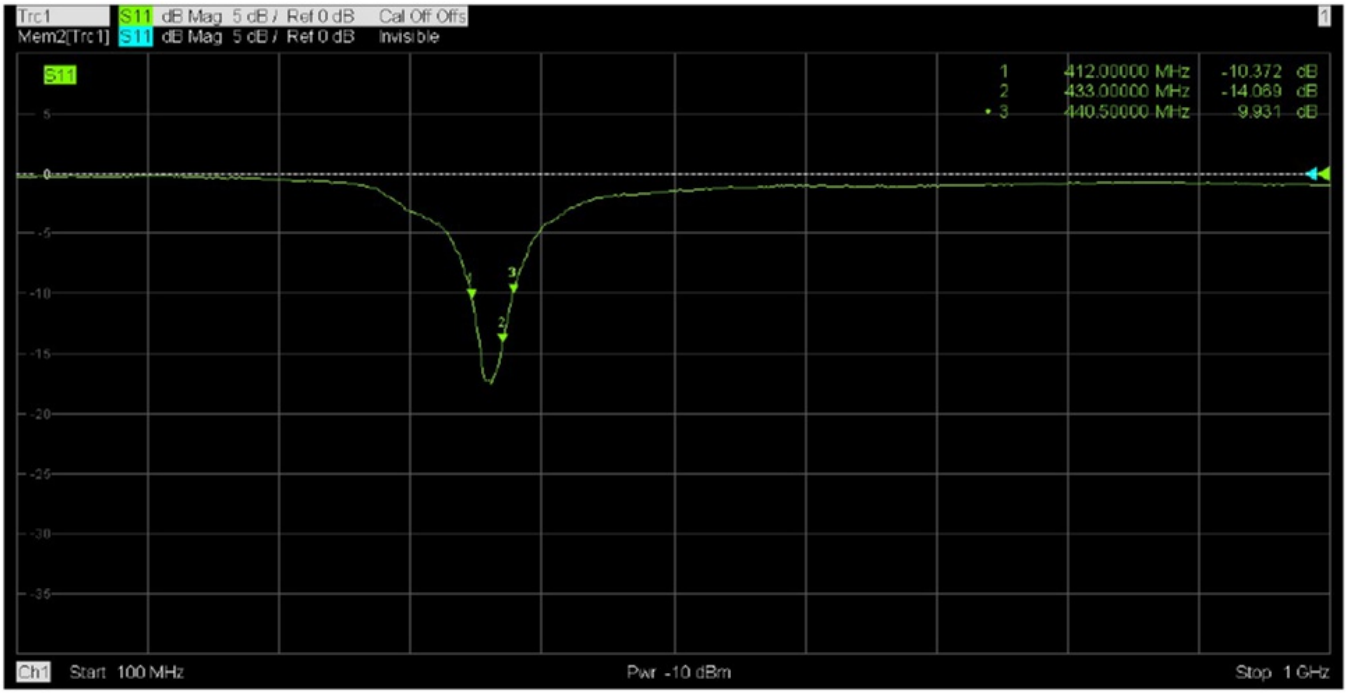

H-PLANE

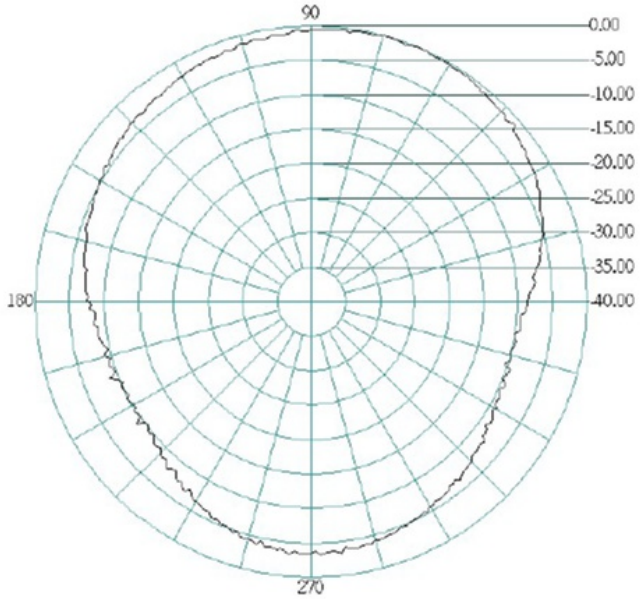
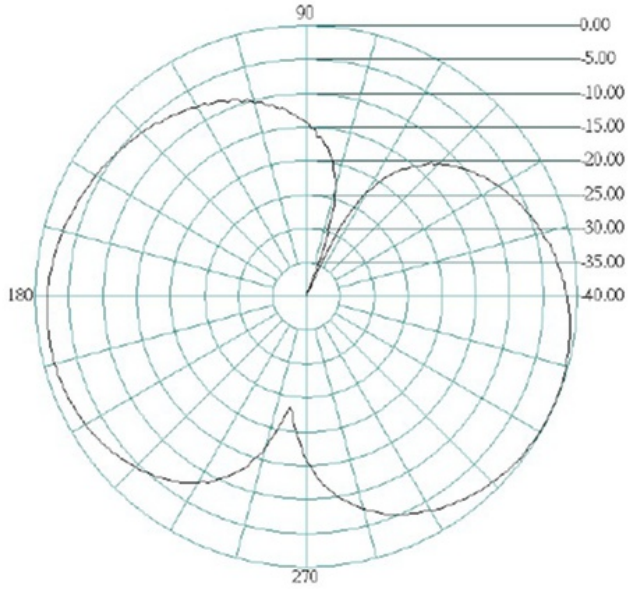
E-PLANE